METALS

1. The following diagram represents extraction of sodium by the Down's cell

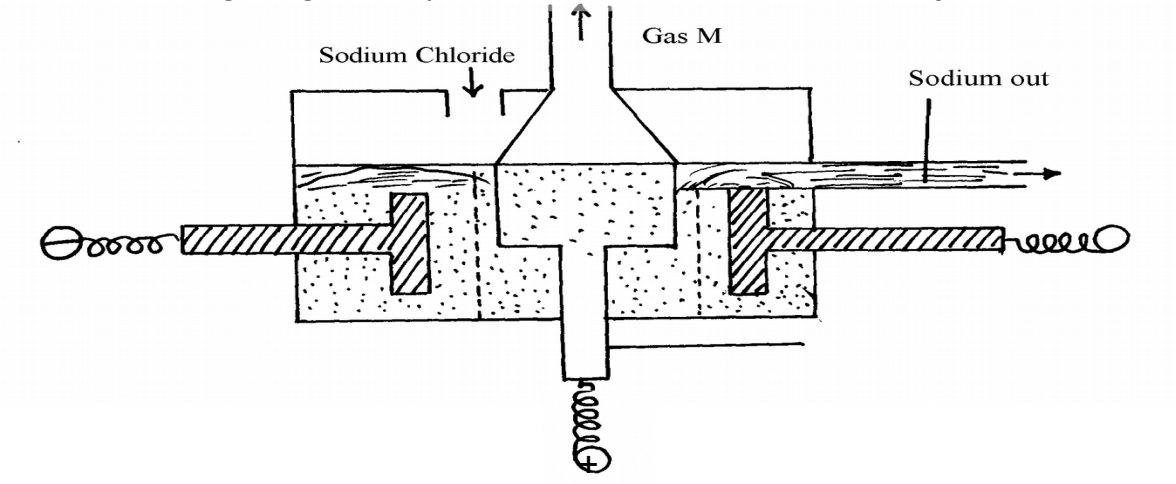

(a) Why is the anode made of graphite in this case instead of steel which is a better conductor of electricity?

(b) How are the electrolytic products separated from reacting?

(c) Give reasons why large quantities of electricity is required for this process

2. a) Give **one** environmental hazard associated with the extraction of zinc metal

b) Suggest **one** manufacturing plant that can be set up near zinc extraction plant. Give reasons for your answer

c) What properties of aluminium and its alloys make it suitable for use in making aircraft parts

3. Aluminium is used in making overhead cables. State **two** properties of aluminium that
makes it suitable for this use

4. The stages shown in the following diagram can be used to extract zinc from its oxide:-
Name the stage and the process taking place in it:-

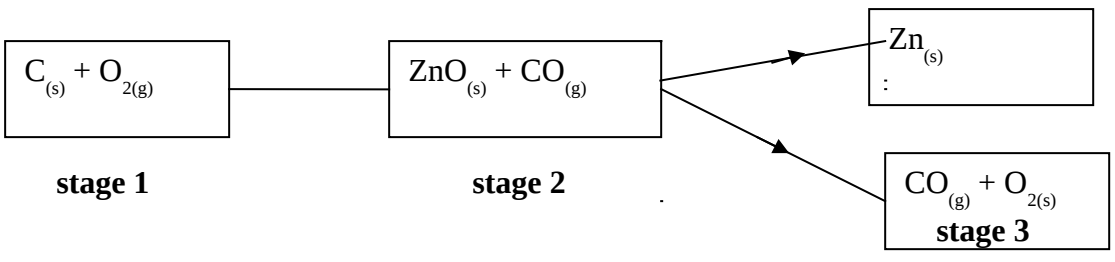

Name each sage and the process taking place in it:

Stage 1.....

Stage

2.....

Stage

3.....

5. Study the flow chart below and answer the questions that follow:

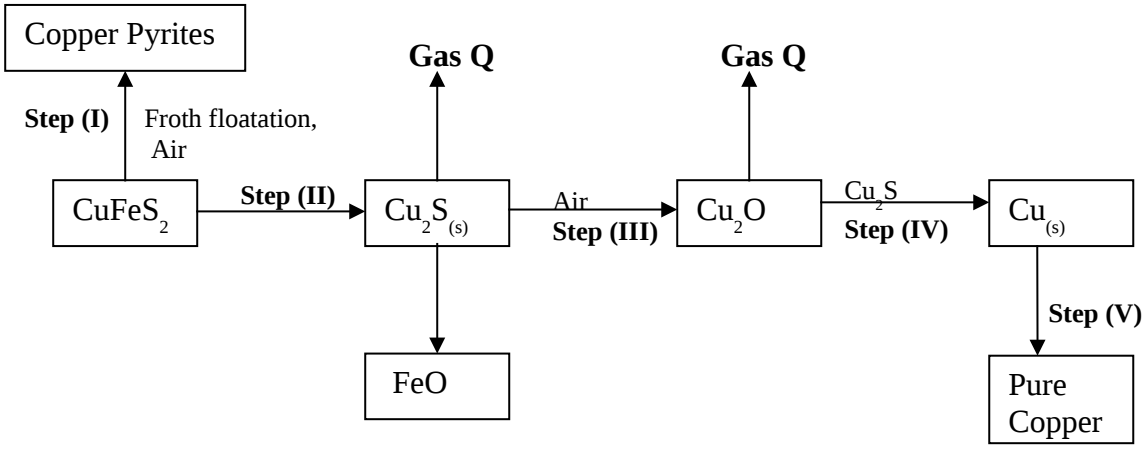

(a) Name gas **Q** .....

(b) With the help of diagram, describe how step (V) is carried out

6. The flow chart below shows steps used in the extraction of zinc from one of its ores.

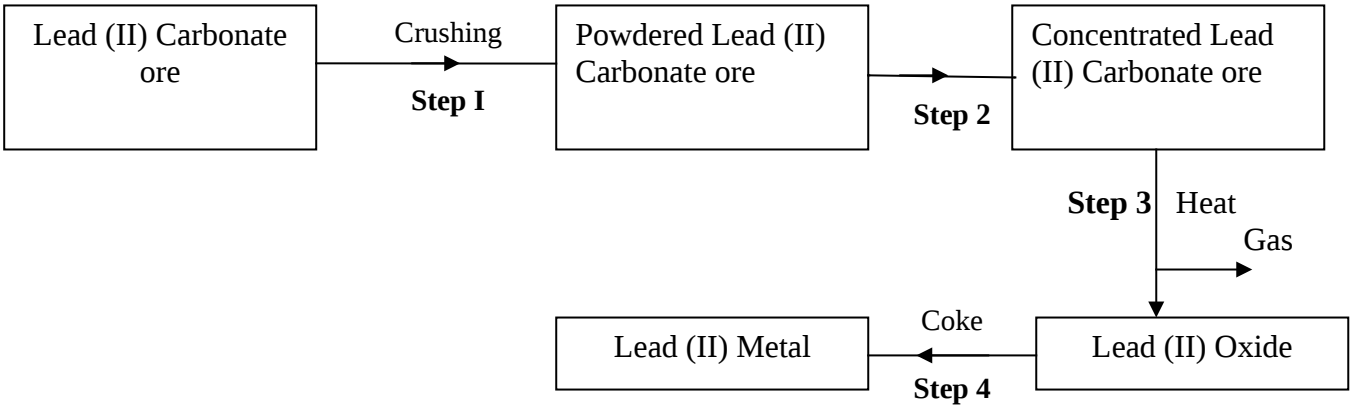

a) Name the process that is used in **step 2** to concentrate the ore

b) Write an equation for the reaction which takes place in **step 3**

c) Name **one** use of lead

7. Name the chief ores from which the following metals are extracted

a)Aluminium .....

b) Copper .....

8. The diagram below represents the second stage in extraction of aluminium metal

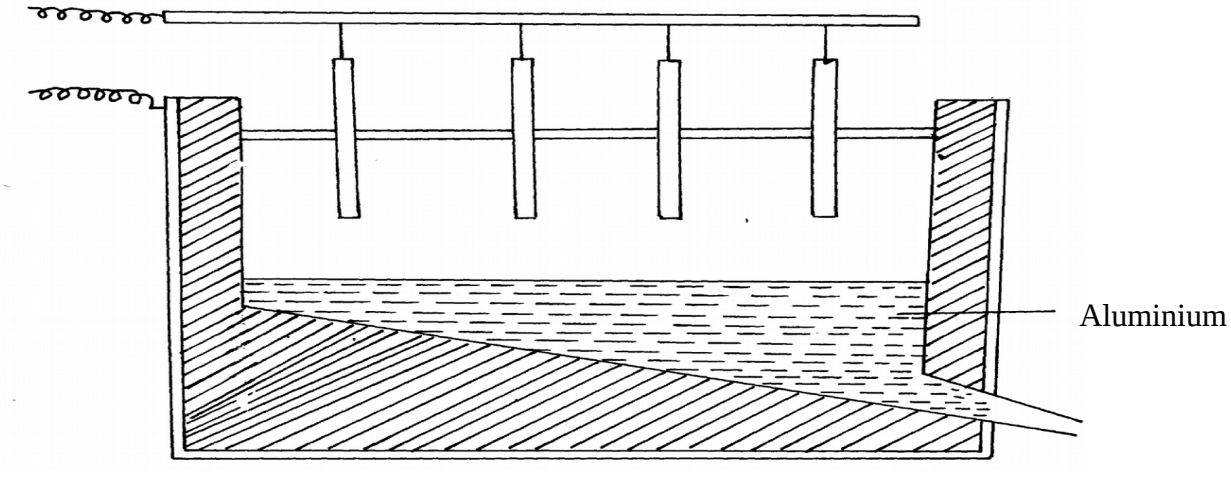

i) On the diagram label the: Anode, cathode and the electrolyte region

ii) The melting point of aluminium oxide is 2054ºC, but the electrolysis is carried out at between
800-900ºC

(i) Why is the electrolysis not carried out at 2054ºC

(ii) What is done to lower the temperature?

iii) The aluminium which is produced is tapped off as a liquid .What does this suggest about its
melting points?