WATER AND HYDROGEN - QUESTIONS

1. (a) Hydrogen can reduce coppers Oxide but not aluminium oxide. Explain

(b) When water reacts with potassium metal the hydrogen produced ignites explosively on the surface of water.

(i) What causes this ignition?

(ii) Write an equation to show how this ignition occurs

2. In an experiment, dry hydrogen gas was passed over hot copper (II) oxide in a combustion tube as shown in the diagram below:-

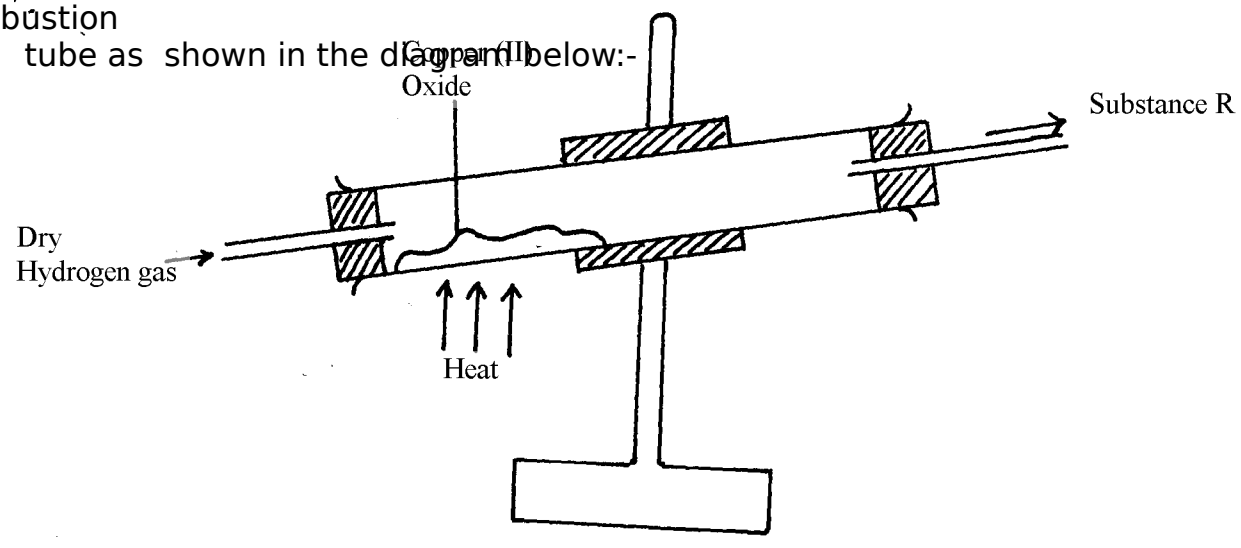

(a) Complete the diagram to show how the other product, substance **R** could be collected in the laboratory.

(b) Describe how copper could be obtained from the mixture containing copper (II) oxide

3. The setup below was used to investigate the reaction between metals and water.

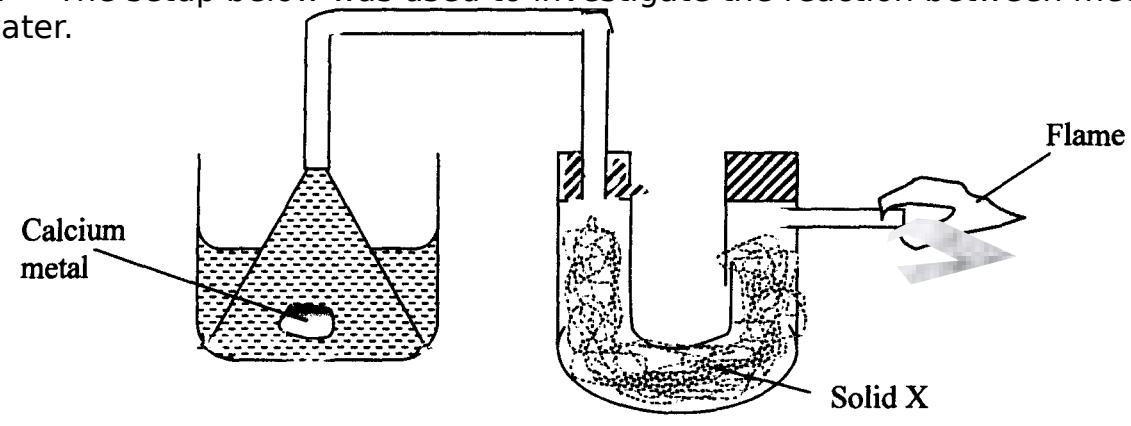

(a) Identify solid **X** and state its purpose

Solid X .....

.....

Purpose

.....

(b) Write a chemical equation for the reaction that produces the flame.

4. Gas **P** was passed over heated magnesium ribbon and hydrogen gas was collected as shown in the diagram below:

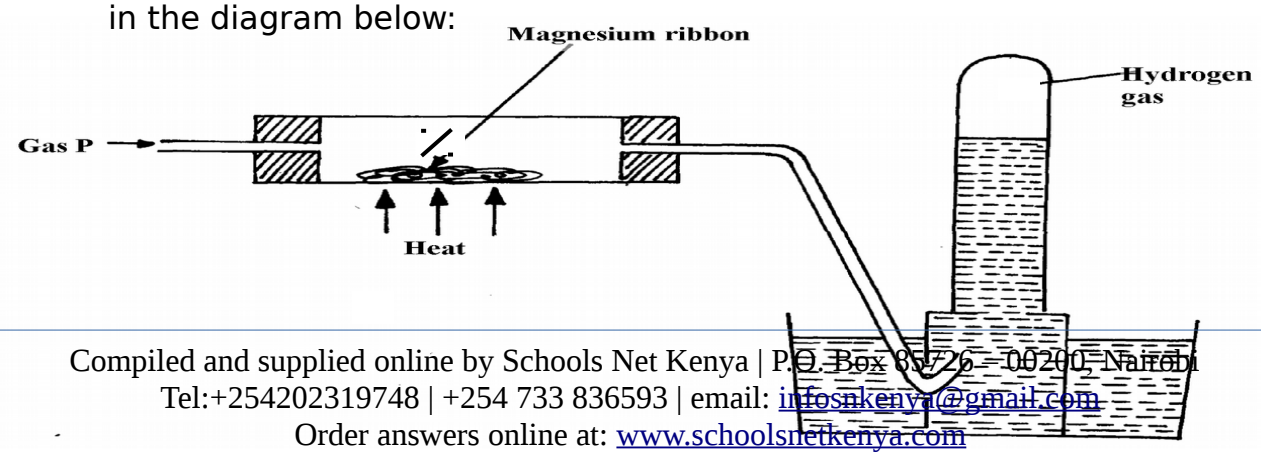

(i) Name gas **P**

.....

(ii) Write an equation of the reaction that takes place in the combustion tube

(iii) State **one** precaution necessary at the end of this experiment

5. When hydrogen is burnt and the product cooled, the following results are obtained as shown in the diagram below:

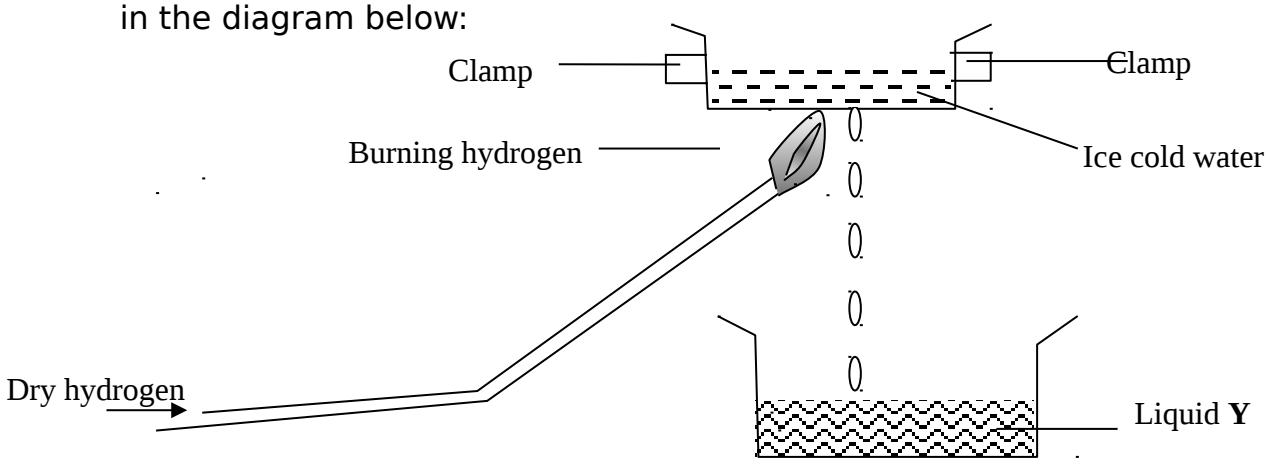

(a) Write the equation for the formation of liquid **Y**

(b) Give a chemical test for liquid **Y**

6. Jane set-up the experiment as shown below to collect a gas. The wet sand was heated before
heating Zinc granules

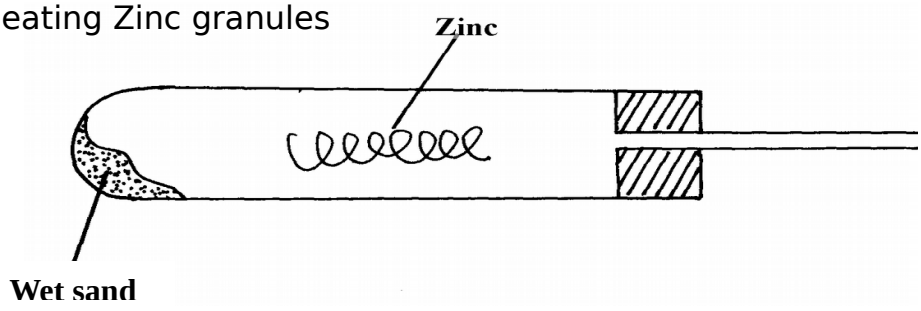

(a) Complete the diagram for the laboratory preparation of the gas

(b) Why was it necessary to heat wet sand before heating Zinc granules?

7.

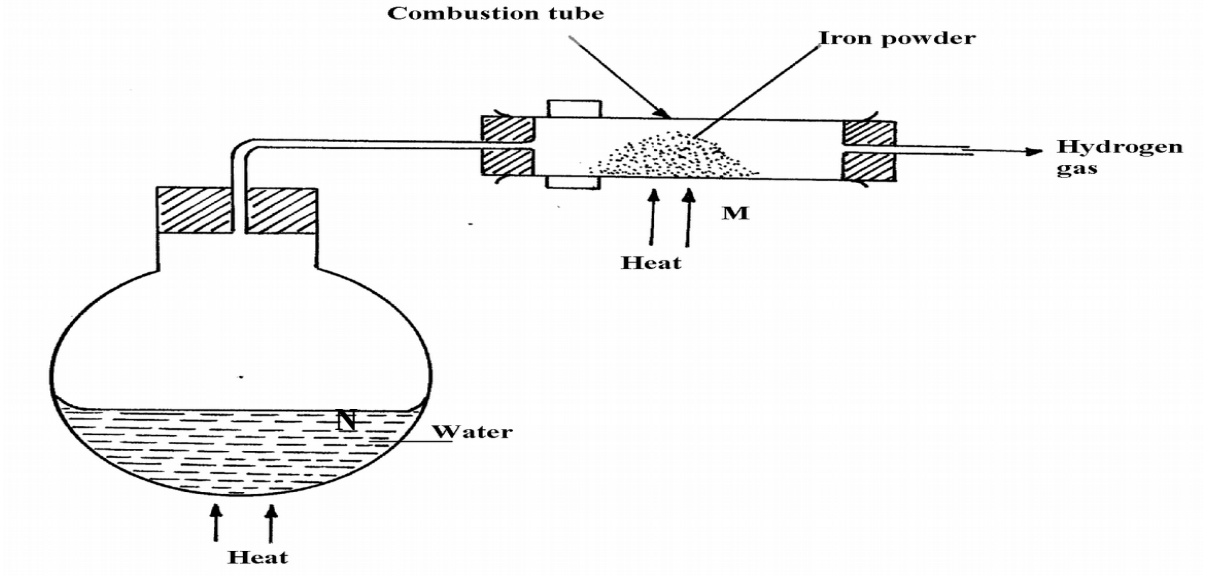

(a) Between **N** and **M** which part should be heated first? Explain

(b) Write a chemical equation for the reaction occurring in the combustion tube.