MUTITO SUB-COUNTY KCSE REVISION MOCK EXAMS 2015

232/3
PHYSICS
PAPER 3
(PRACTICAL)
TIME: 2½ HOURS

SCHOOLS NET KENYA
Osiligi House, Opposite KCB, Ground Floor
Off Magadi Road, Ongata Rongai | Tel: 0711 88 22 27
E-mail:infosnkenya@gmail.com | Website: www.schoolsnetkenya.com

NAME _____ INDEX NO. _____

SCHOOL _____ SIGNATURE _____

DATE _____

232/3
PHYSICS
PAPER 3
(PRACTICAL)
TIME: 2½ HOURS

MUTITO SUB-COUNTY FORM FOUR JOINT EVALUATION TEST, 2015

Kenya Certificate of Secondary Education (K.C.S.E)

232/3
PHYSICS
PAPER 3
(PRACTICAL)
TIME: 2½ HOURS

INSTRUCTIONS TO CANDIDATES

1. Write your name, school and index number in the spaces provided above.
2. Sign and write the date of the examination in the spaces provided above.
3. This paper consists of **two** questions.
4. Answer **all** the questions in the spaces provided in the question paper.
5. **All** working must be clearly shown.
6. You are not allowed to start working with the apparatus for the first ¼ hours of the **2½** hours allowed for this paper. This time is to enable you read the question paper and make sure you have all the apparatus you may need.
7. Marks are given for a clear record of the observations actually made, for their suitability and accuracy and the use made of them.
8. Candidates are advised to record their observations as soon as they are made.
9. Mathematical tables and electronic calculators **may be** used in calculations.
10. This paper consists of 7 printed pages.
11. Candidates should check to confirm that all pages are printed as indicated and no questions are missing.

FOR EXAMINERS' USE ONLY

QUESTION	MAXIMUM SCORE	CANDIDATE'S SCORE
1	20	
2	20	
TOTAL	40	

1. You are provided with the following apparatus.

- A measuring cylinder
- A test tube
- A 250ml beaker
- Water in a beaker
- Six 1g ball bearings
- A vernier caliper
- Half metre rule
- Label

Procedure

a) i) Measure the internal diameter of the measuring cylinder using a vernier calipers.

D = _____ cm (1 mark)

ii) Calculate the area of cross section of the inner part of the cylinder.

A = _____ cm (2 marks)

b) i) Pour water into a measuring cylinder upto about 50ml mark. Mark this point h_1 using the label.

ii) Place the test tube upright inside the measuring cylinder so that it floats upright. Measure the increase in height of the water level from h_1. Record this value in the table.

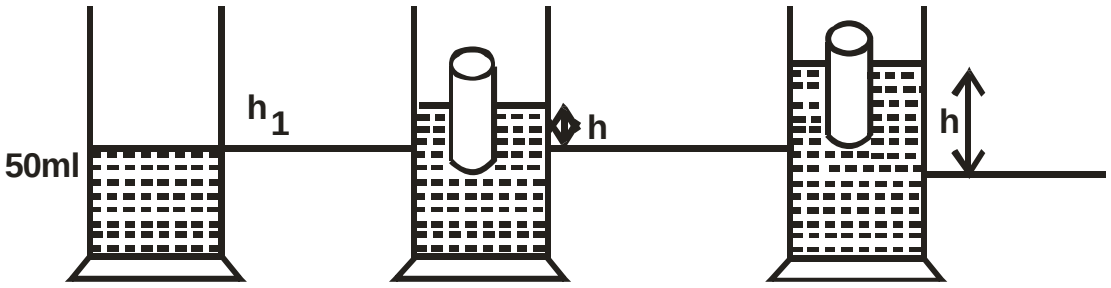

(i) Cylinder without test tube **(ii) Test tube without ball bearings** **(ii) Test tube with ball bearings**

Insert one ball bearing into the test tube then place the test tube back into the cylinder gently. (Remove the test tube slant and let the ball bearing roll to the bottom. Dropping the ball can break the test tube) measure the increase in height from h_1

c) Repeat the procedure in (b) above by adding ball bearings one by one each time measuring the new change in height h from h_1. Enter the results in the table shown. (3 marks)

Mass of ball (g)	0	1	2	3	4	5	6
Change in height (h) (cm)							

d) i) Plot a graph of mass(m) on the (y-axis) against change of water level(h) on the (x- axis) (5 marks)

ii) Determine the slope of the graph. (3 marks)

e) i) Given the equation $m=\rho AH - M_o$ where;

m = mass of the ball in the test tube,

A - Area of cross section of the measuring cylinder,

ρ - Density of water.

M_o - mass of empty test tube

Determine the density of the water from the graph. (3 marks)

ii) Determine the mass M_o of the test tube when empty. (2 marks)

iii) State any **one** source of error. (1 mark)

2. You are provided with the following apparatus.

- Two cells
- A cell holder
- A bulb
- A voltmeter
- An ammeter
- A switch
- A mounted wire labelled PQ
- A micrometre screw gauge
- 7 connecting wires

a) Set up the apparatus as shown in the circuit below.

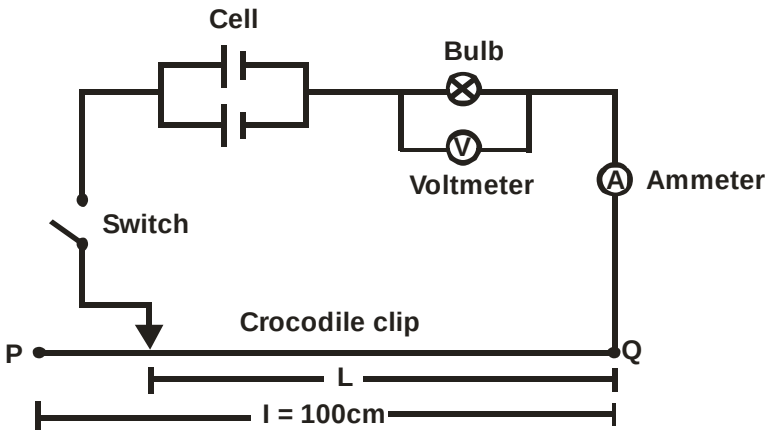

b) With the crocodile clip at P (i.e.) L=100cm take the voltmeter reading (V) and Ammeter reading (I). Record V and I in the table below

Length L(cm)	100	80	60	40	20	0
Voltage V(V)						
Current I (A)						

Repeat the procedure in (b) above for the lengths shown and complete the table. (5marks)

c) State the changes you observe on the bulb as **L** decreases from **P** (1mark)

_____

_____

_____

d) Plot a graph of voltage (V) against length (cm). (5marks)

e) What physical quantity is represented by the slope of the graph at any given point? (1mark)

_____

_____

f) Use your graph to describe how the physical quantity in (e) is affected as the current increases. Explain why. (1mark)

_____

_____

_____

_____

g) i) Given the same apparatus as in (a)(i), draw a diagram of a circuit you would use to determine the current through the resistance wire and the p.d across it. (2marks)

ii) Set the circuit you have drawn. Record the ammeter reading, **I** and the Voltmeter reading, **V** when L = 100cm.

V=_____ volts, I=_____Amperes. (1mark)

iii) Using the micrometre screw gauge, measure the diameter D of the wire.

(Note also the total length, *l* of the resistance wire)

D =_____ m (1mark)

iv) Calculate the quantity

$W = \frac{0.725VD^2}{IL}$ and state the units. (3marks)