NAME: ……..…CLASS:…..…ADM NO:……

SIGNATURE:……INDEX NO:……

232/1
PHYSICS
PAPER 1
JULY/AUG 2014

BUSIA COUNTY JOINT EXAMINATION - 2014

Kenya Certificate of Education
Physics Paper 1

Instructions to candidates

- This paper consists of two sections A and B.
- Answer all the questions in the two sections in the spaces provided after each question
- All working must be clearly shown.
- Electronic calculators, mathematical tables may be used.
- All numerical answers should be expressed in the decimal notations.

SECTION	QUESTION	MAX MARKS	CANDIDATE'S SCORE
I	1 – 12	25	
II	12	11	
	13	12	
	14	11	
	15	09	
	16	12	
TOTAL		80	

SECTION A (25 MARKS)

1. A spherical ball bearing of mass 0.0024 kg is held between the anvil and spindle of a micrometer screw gauge. The reading on the gauge when the jaws are closed without anything in between is 0.11mm. Use this information and the position of the scale in the figure below to answer the questions **(a)** and **(b)** below:

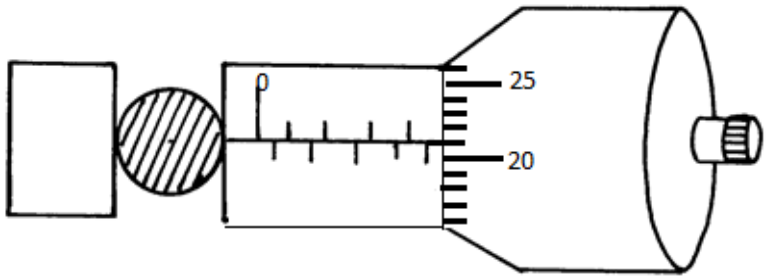

a) What is the diameter of the ball bearing? (1 mk)

……

……

b) Find the density of the ball bearing correct to 3 significant figures (2 mks)

……

……

……

……

2. The diagram below shows a wire loop with two threads tied across it. The loop is dipped into a soap solution such that the soap film covers it as shown.

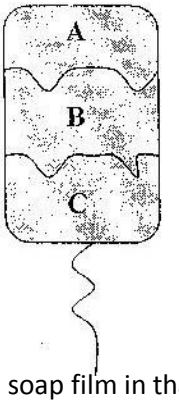

Region B is punctured such that the soap film in that section is broken. On the space alongside the diagram sketch the resulting shape of the wire loop. Give a reason for the shape. (2 mks)

……

……

3. The figure below shows an arrangement to demonstrate diffusion through solids:-

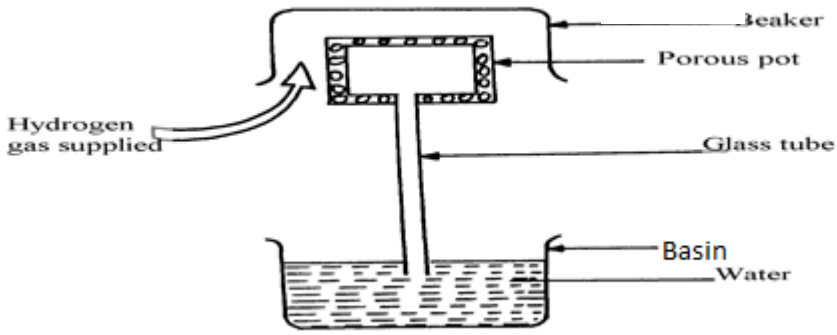

The hydrogen gas is supplied for sometimes then stopped and the beaker removed. State and explain what is likely to be observed when the hydrogen gas supply is stopped (3 mks)

.....

.....

.....

.....

4. Figure 2 shows two identical thermometers. Thermometer **A** has a blackened bulb while thermometer **B** has a silvery bulb. A candle is placed equidistant between the two thermometers

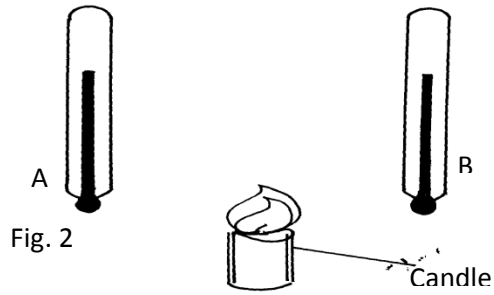

Fig. 2

State with a reason the observations made after some time(2 mk)

.....

.....

.....

5. Explain why it is dangerous for a bus to carry standing passengers. (2 mks)

……

……

6. A uniform metre rule is balanced at its centre. It is balanced by the 30N, 5N and the magnetic force between **P** and **Q**. **P** is fixed and **Q** has a weight of 5N

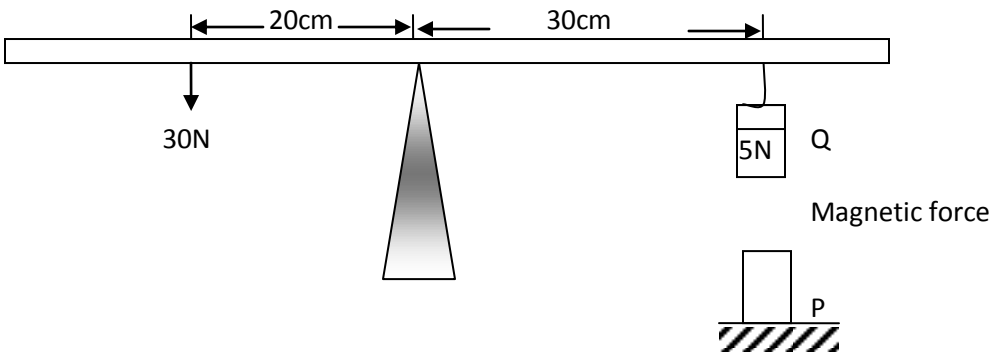

a) Ignoring the weight of the metre rule, calculate the value of the magnetic force between Q and P (2 mks)

……

……

……

……

b) Given that the lower end of Q is North pole, state polarity of the end of P facing Q. (1 mk)

……

7. (a) Give a reason why water is not suitable as a barometric liquid. (1 mk)

……

……

(b)Explain why a lift pump is unable to raise water from a borehole where the level of water is 20m below the ground level. (1 mks)

……

……

8. The diagram below shows a mass of 12g hanged on a set of 6 identical springs. When a mass of 12g was hanged on spring A alone, its extension was 5cm. Find the extension of the combination shown if each spring and each rod has negligible mass (2 mks)

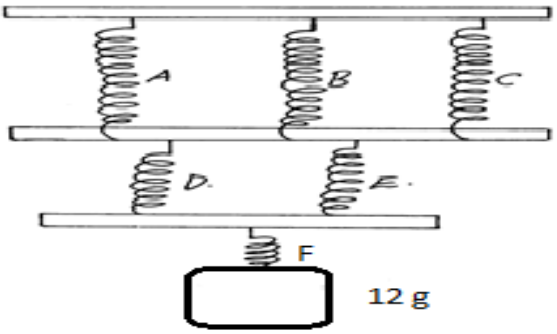

……

……

……

9. Sea water of density **1.04g/cm^3** is being pumped into a tank through a pipe of uniform cross-sectional area of 3.142cm^2. If the speed of water in the pipe is 5m/s, determine the mass flux in S.I unit. (2 mks)

……

……

……

……

10. Below shows a displacement – time graph.

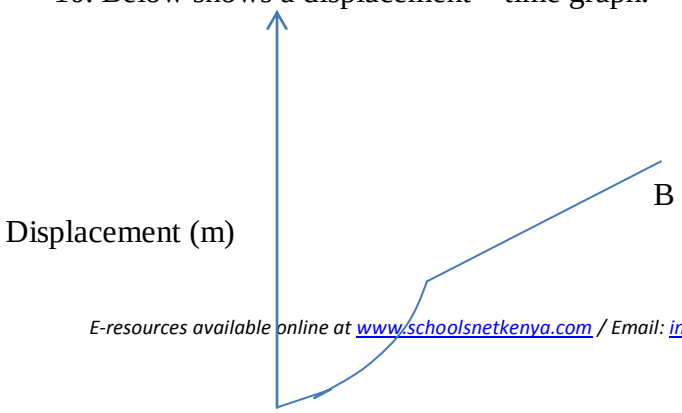

A

O Time (s)

Describe the motion of the body between points:

OA…… (1 mk)

AB……..(1 mk)

11. A quantity of air occupied $500cm^3$ at 15^0C when the pressure was 76 cmHg. At what temperature would it occupy $460cm^3$ if the pressure was 85cmHg? (2 mks)

……

……

……

……

SECTION B (55 MARKS)

12 a) (i) Define velocity ration of a machine. (1 mk)

……

……

(ii) Draw a labeled diagram of a pulley system with a velocity ratio of 5. (2 mks)

(iii) Suggest any two possible reasons why the efficiency does not reach the 100% mark.(2 mks)

……

……

……

(b) The effort piston of a hydraulic machine is of radius 2.8 cm, while that of the load piston is of radius 14cm. The machine raises a load of 120 kg at a constant velocity through 2.5m. If the machine has an efficiency of 80%, find:-

(i) the velocity ratio of the hydraulic machine. (2 mk)

……

……

……

(ii) The mechanical advantage of the hydraulic machine. (2 mks)

……

……

(iii) The effort needed to raise the load. (2 mks)

……

……

……

13. (a) An object is released to fall vertically from height of 100m. At the same time another object is projected vertically upward with velocity of 40m/s.

(i) Calculate the time taken before the objects meet (3mks)

……

……

……

……

……

(ii) At what height do the objects meet? (2mks)

……

……

(b) A string of negligible mass has a bucket tied at the end. The string is 60cm long and the bucket has a mass of 45g. The bucket is swung horizontally making 6 revolutions per second. Calculate

(i) The angular velocity (2mk)

……

……

……

(ii) The angular acceleration (2mks)

……

……

……

(iii) The tension on the string (2mks)

……

……

……

(iv) The linear velocity (1mk)

……

……

14. a) State Archimedes' principle. (1mk)

……

……

(b) The figure below shows a rectangular buoy of mass 4000kg tethered to the sea-bed by a wire. The dimensions are 4m x 1.5m x 2.2m.

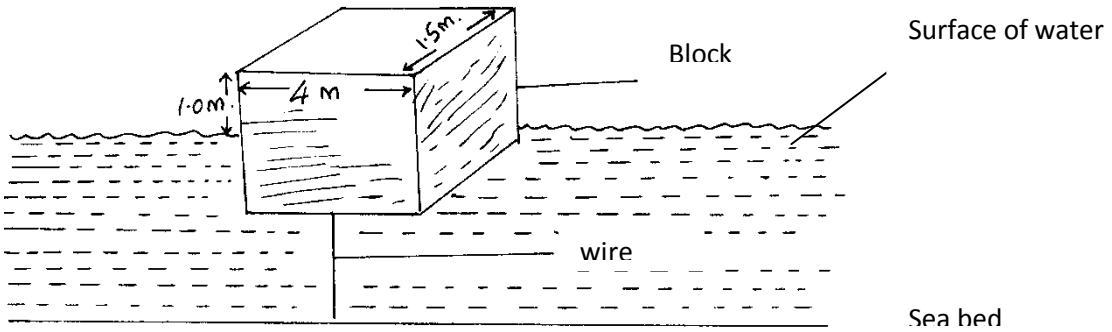

Calculate the :-

(i) Weight of sea water displaced by the buoy (density of sea water = 1100kg/m^3)

(3 mks)

……

……

……

(ii) Upward force exerted on the buoy by the water. (1mk)

……

(iii) Tension in the wire (2mks)

……

……

(c) A test tube of mass 10g and uniform cross-sectional area $4cm^2$ is partly filled with lead shots and floats vertically in water with 5cm of its length submerged.

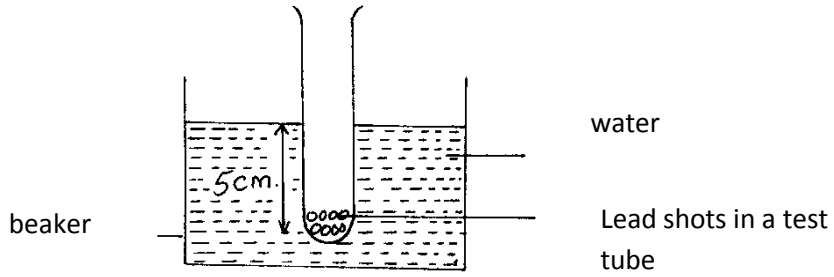

Find the:-

(i) Mass of the lead shots. (2mks)

……

……

……

……

(ii) Length of the test tube that would be submerged in a liquid of density $0.75g/cm^3$. (2mks)

……

……

……

15. (a) State two differences between boiling and evaporation. (2 mk)

……

……

……

(b) 1200g of a liquid at 10^0C is poured into a well-logged calorimeter. An electric heater rated 1KW is used to heat the liquid. The graph in fig 4 below shows the variation of temperature of the liquid with time.

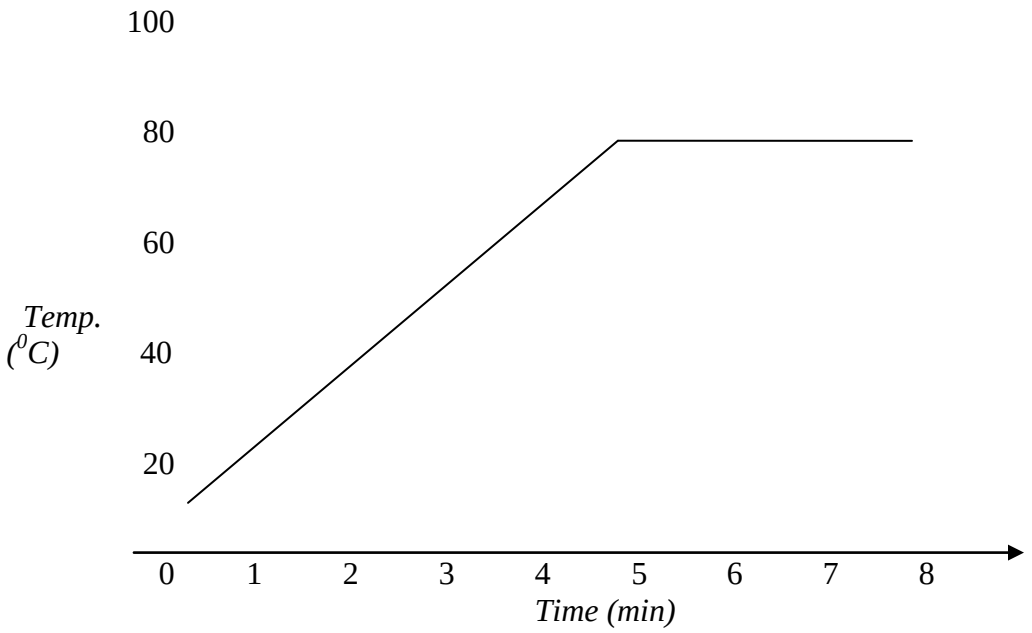

Fig. 4

Use the graph to answer the following questions:

(i) What is the boiling point of the liquid? (1 mk)

……

……

(ii) How much heat is given out by the heater to take the liquid to the boiling point? (2 mks)

……

……

……

(iii) Determine the specific heat capacity of the liquid stating any assumptions made. (2 mks)

……

……

……

(iv) If 50g of the liquid vapour was collected by the end of the 8th minute, determine the specific latent heat of vaporization of the liquid. (2 mks)

……

……

……

……..

16. (a) (i)State Newton's second law of motion. (1 mk)

……r……

……

……

(ii) A striker kicks a ball of mass 250g initially at rest with a force of 75N. if the foot was in contact with the ball for 0.10sec. Calculate the take off velocity of the ball. (2 mks)

……

……

……

……

(b)A bullet of mass 20g moving at 400 m/s strikes a block of wood of mass 3.5kg initially at rest. The bullet sticks into the block and the two move off together on a horizontal surface,where a frictional retarting force of 4N is acting between the block and surface.

(i) Determine the initial common velocity of bullet and wooden block.(2 mks)

……

……..

……

……

(ii) What distance does the block move before coming to rest? (3 mks)

……

……

(c) Two immiscible liquids are poured in an open container to the levels shown in the diagram below.

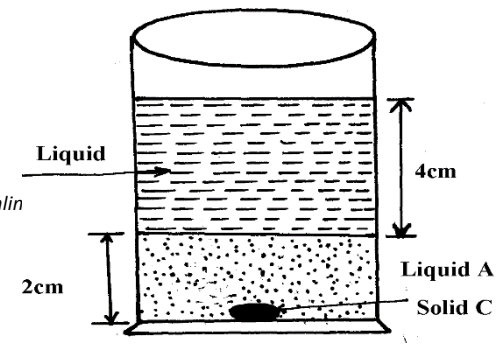

Figure 5

If the densities of the liquids **A** and **B** are $1g/cm^3$ and $0.8g/cm^3$ respectively and the atmospheric pressure 760 mmHg, find the total pressure acting upon solid **C** at the bottom of the container. (Take density of mercury to be $13.6g/cm^3$ and g = 10 N/Kg) (3 mks)

……

……

……

……

ANSWERS:

Order a copy of answers from www.schoolsnetkenya.com/order-e-copy

NB> We charge Kshs. 100 ONLY to meet website, e-resource compilation and provision costs